Wireless AC power control

ABSTRACT

The project is designed to control the speed of an induction motor such as fans, by using a standard TV remote. In home automation application, convenience of remotely controlling the speed of the fan is achieved.

A standard TV remote sends coded infrared data to the control board, which is then received by an IR sensor (at the receiver end) interfaced to a microcontroller of 8051 family. Each time a button is pressed it sends a specific coded data in infrared range. This coded data is executed by the microcontroller to deliver delayed firing pulses to the thyristor through optical isolation. The power to the load connected in series with the thyristor is controlled based on the received signal. Also the firing angle is displayed on a 7-segment display. A lamp load shall be provided in place of a motor whose varying intensity demonstrates the varying power to the motor for speed control. A lamp is provided in place of an induction motor for demonstration purpose.

Further the project can be enhanced by adding more outputs from the microcontroller feeding relay drivers to switch ON/OFF the domestic loads together with the speed control of fan.

BLOCK DIAGRAM

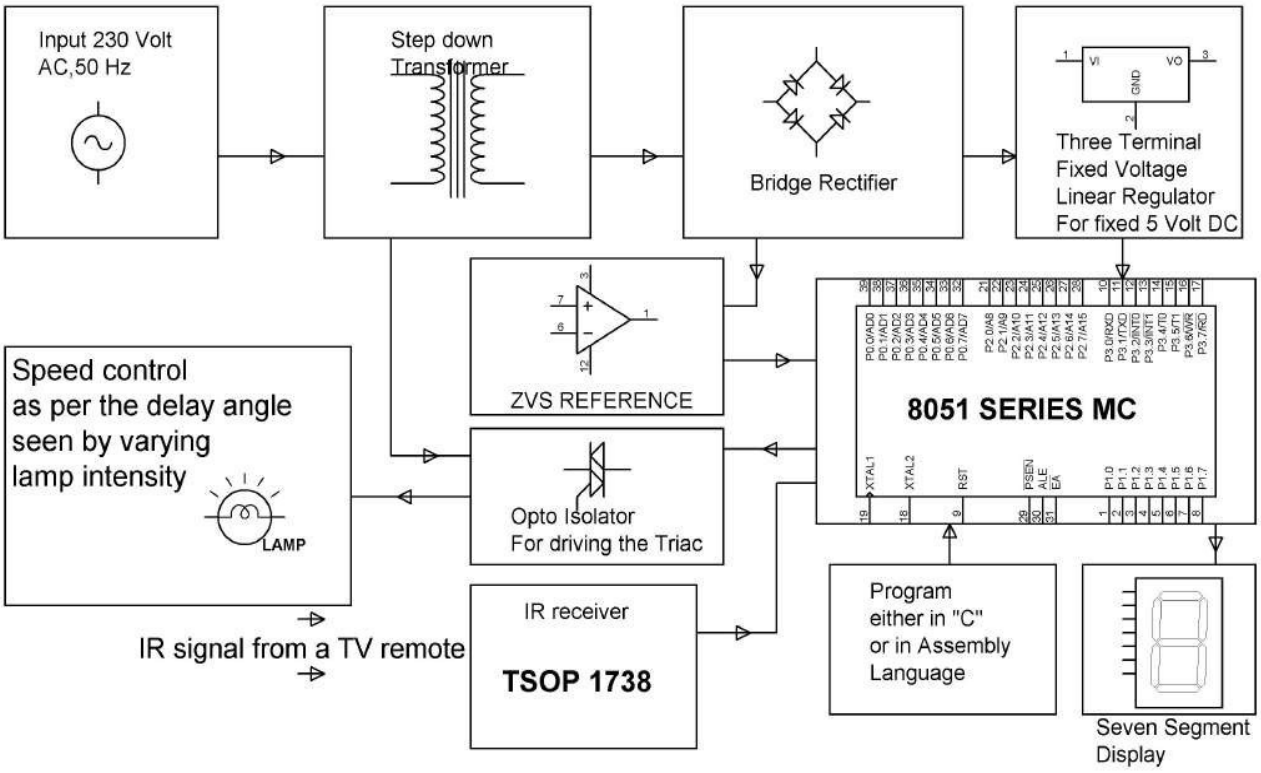

HARDWARE REQUIREMENTS:

OP-Amp, TRIAC, Opto-isolator, Resistors, Capacitors, Diodes, LED, Transformer, Voltage Regulator, 8051 series Microcontroller, TSOP (IR sensor), 7 Segment Display, TV remote.

SOFTWARE REQUIREMENTS:

Keil compiler

Languages: Embedded C or Assembly

1