PHASE SEQUENCE CHECKER AND SINGLE PHASING DETECTOR FOR THREE PHASE SUPPLY

ABSTRACT

The project is designed to check the sequence of the 3 phase supply. It is very important to know the phase sequence particularly for 3 phase motors. For example, if the 3 phase motor is used for pumping action, any phase reversal accidentally resulting in wrong sequence could force the motor run in the wrong direction. This could result in dry run of the motor to develop permanent fault.

In this project direct 3-phase AC supply 50Hz is fed through voltage drop arrangement duly stabilized by zennor diodes to a logic circuit comprising of NAND gates and OR gates to detect the proper sequence of RYB by series of pulses of fixed duration. In the event of changing the sequence from RYB to say YBR, the combination of NAND and OR gates develops an output with a missing pulse during the fixed time duration. This pulse is used in triggering an input signal to a 8051 series microcontroller through a timer to drive LEDs placed in a circle. In proper sequence the LEDs run clockwise having received no triggering. While the sequence is not there the triggering is done which is indicated by LEDs running clockwise for some time and then anti clockwise for the next and so it continues. DC requirement of the circuit is powered from a step down transformer along with a bridge rectifier ,regulators and filter capacitor.

Further this project can be enhanced by providing a relay to circuit to cutoff the supply to the load

BLOCK DIAGRAM

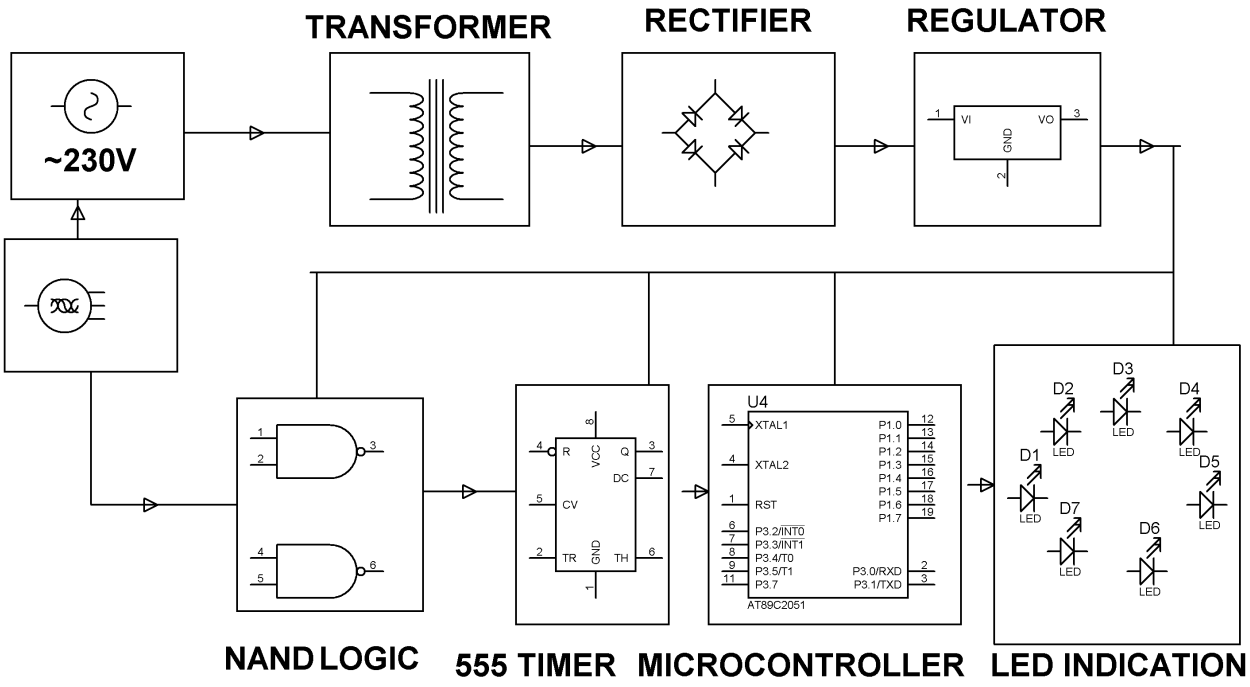

HARDWARE REQUIREMENTS:

8051 Microcontroller ,Transformer, Diodes, 7812,7805 voltage regulator, Capacitors, LED, Resistors, NAND Gate, OR Gate,

SOFTWARE REQUIREMENTS:

Keil Compiler

language: Embedded ‘C’ or Assembly.